Vendo® Engineering *Uni-1 2D Narrow Column Set Up Guide*

Size: 16oz **Rev. A** **Date 5/21/02**
Pkg. Description/Type: Dasani Nutri Water
Franchise: Coca-Cola

Column Setup

Cam Setting	Back Spacer	Gage Bar Location	Slider Lower Strap (**)	Side Spacer	Sold Out Flap (*)	Sold Out Spacer
2	13	#1	1-1038036	N/A	Short 1083449	1077457

Note: To properly vend product, the Uni-1 must have the columns set up as illustrated.
***Install spring on right (Low Tension) side**
****Product Slide: Remove the two (2) screws from the lower strap and install the slide with the ramp facing the column.**

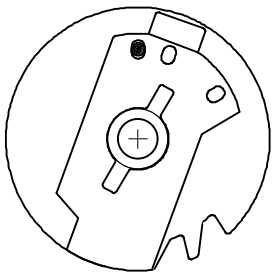

Setting # 2
Double Depth
Narrow Product
PN:388999, 389000

Cam & Retainer

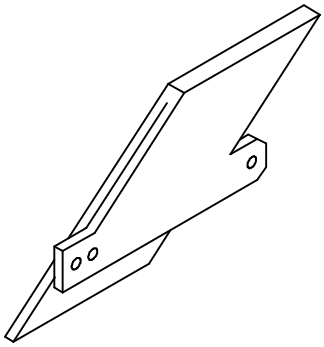

PN:1038036

Lower Front Strap Slider

Set Up Guide

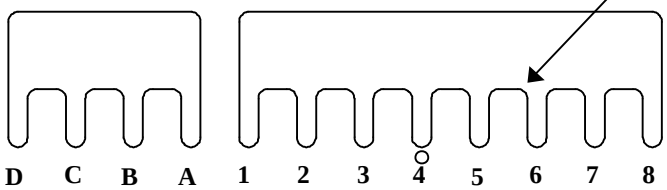

BACKSPACER / NECK GUIDE LOCATIONS

FRONT OF PARTITION

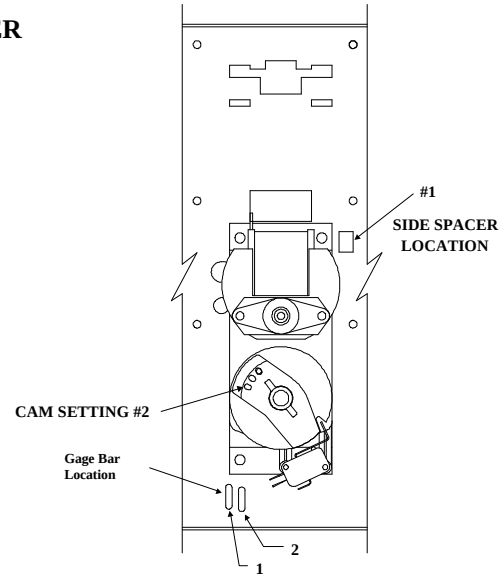

GAGE BAR LOCATIONS

FOR OTHER PRODUCT SET-UP GUIDES, CONTACT THE VENDO COMPANY.
TEL: (559) 439-1770 FAX: (559) 650-3455