Vendo® Engineering *Uni-1 3D Narrow Column Set Up Guide*

Size: 16oz **Rev. A** **Date 5/21/02**

Pkg. Description/Type: Nestea

Franchise: Coca-Cola **KIT#**

Column Setup

Cam Setting	Back Spacer	Gage Bar Location	Gage Bar Clip Location	Side Spacer	Sold Out Flap (*)	Sold Out Spacer
2	9	#1	C/#1	388996 Loc. #1	Short 1083449	1077457

Note:To properly vend product the Uni-1 must have the columns set up as illustrated. *Install spring on right (Low Tension) side

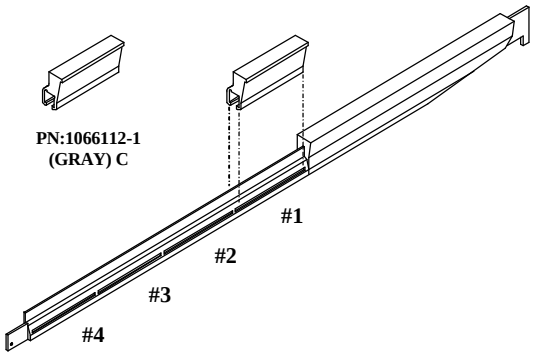

Gage Bar Clip Location

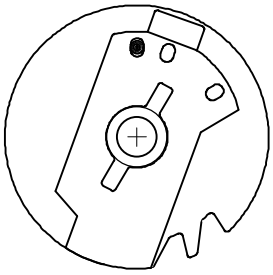

Setting # 2
Double Depth
Narrow Product
PN:388999, 389000

Cam & Retainer

Set Up Guide

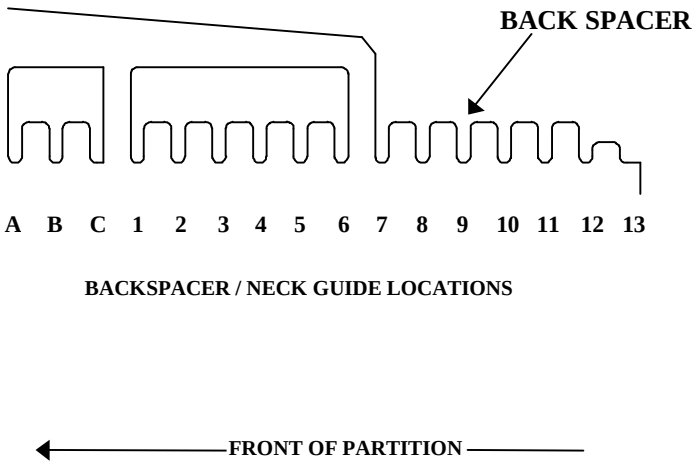

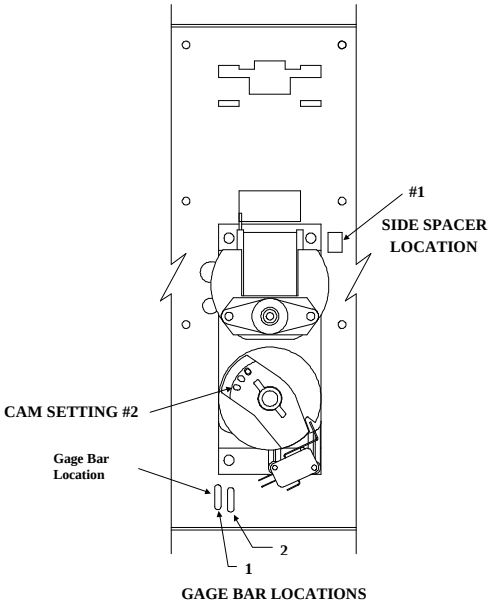

FOR OTHER PRODUCT SET-UP GUIDES, CONTACT THE VENDO COMPANY.
TEL: (559) 439-1770 FAX: (559) 650-3455